HEXADECIMAL VERSION

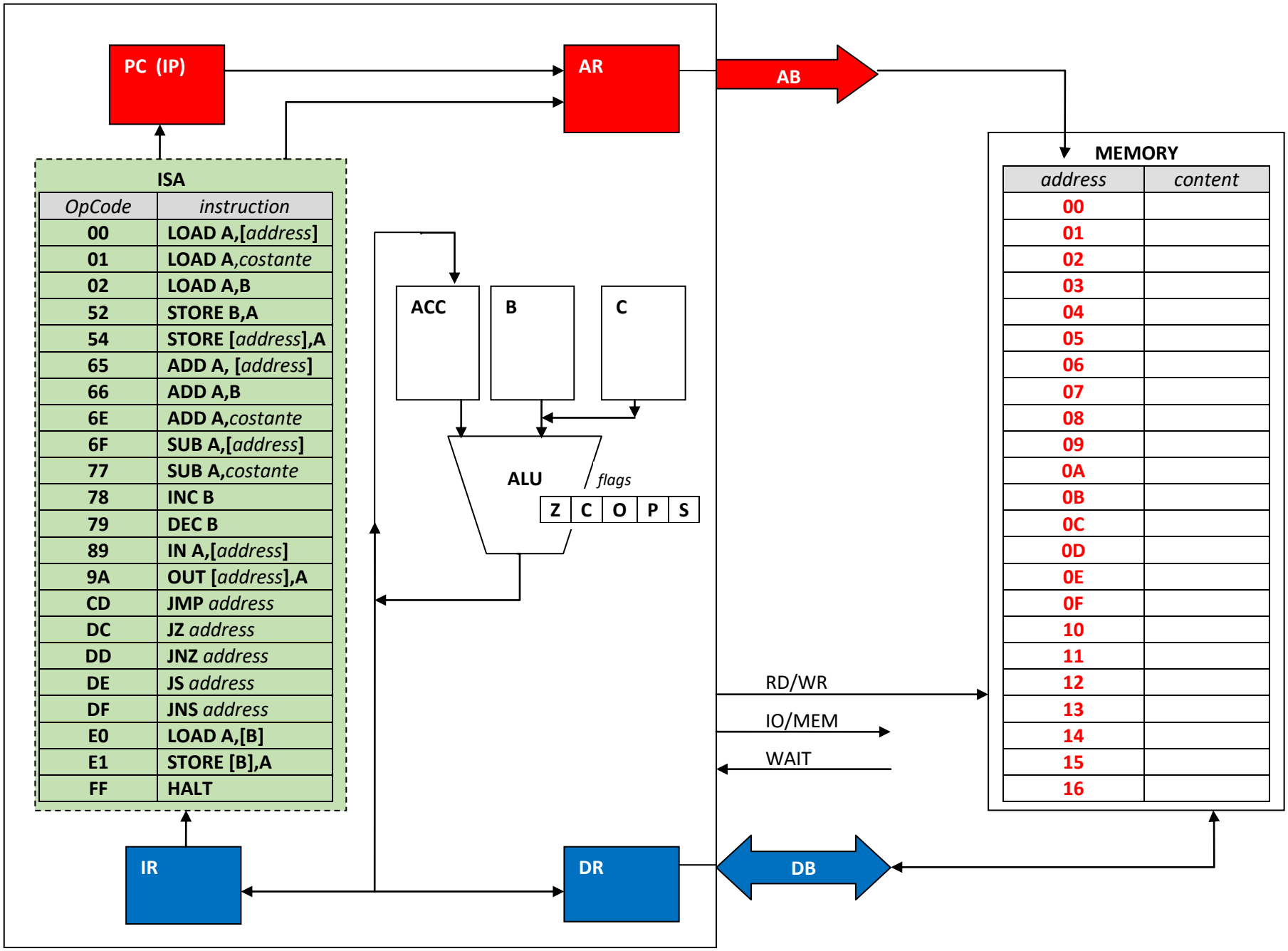

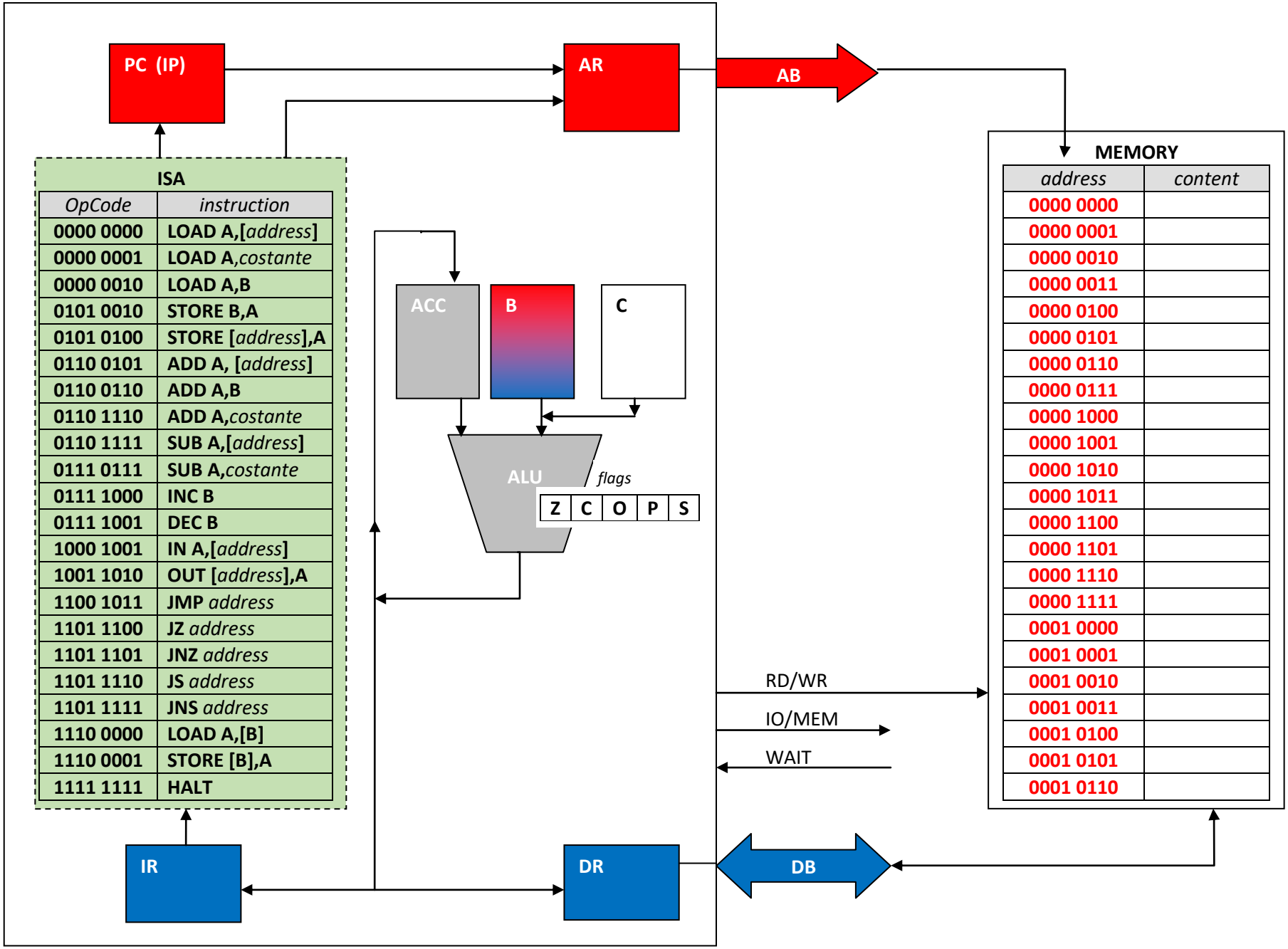
PC (IP)
AR
AB
ISA
OpCode
instruction
0000 0000
LOAD A,[address]
0000 0001
LOAD A,costante
0000 0010
LOAD A,B
0101 0010
STORE B,A
0101 0100
STORE [address],A
0110 0101
ADD A, [address]
0110 0110
ADD A,B
0110 1110
ADD A,costante
0110 1111
SUB A,[address]
0111 0111
SUB A,costante
0111 1000
INC B
0111 1001
DEC B
1000 1001
IN A,[address]
1001 1010
OUT [address],A
1100 1011
JMP address
1101 1100
JZ address
1101 1101
JNZ address
1101 1110
JS address
1101 1111
JNS address
1110 0000
LOAD A,[B]
1110 0001
STORE [B],A
1111 1111
HALT
ACC
B
C
ALU
flags
Z
C
O
P
S
MEMORY
address
content
0000 0000
0000 0001
0000 0010
0000 0011
0000 0100
0000 0101
0000 0110
0000 0111
0000 1000
0000 1001
0000 1010
0000 1011
0000 1100
0000 1101
0000 1110
0000 1111
0001 0000
0001 0001
0001 0010
0001 0011
0001 0100
0001 0101
0001 0110
RD/WR
IO/MEM
WAIT
IR
DR
DB