µP con 8 linee di dato (DB) e 8 di indirizzo (AB)

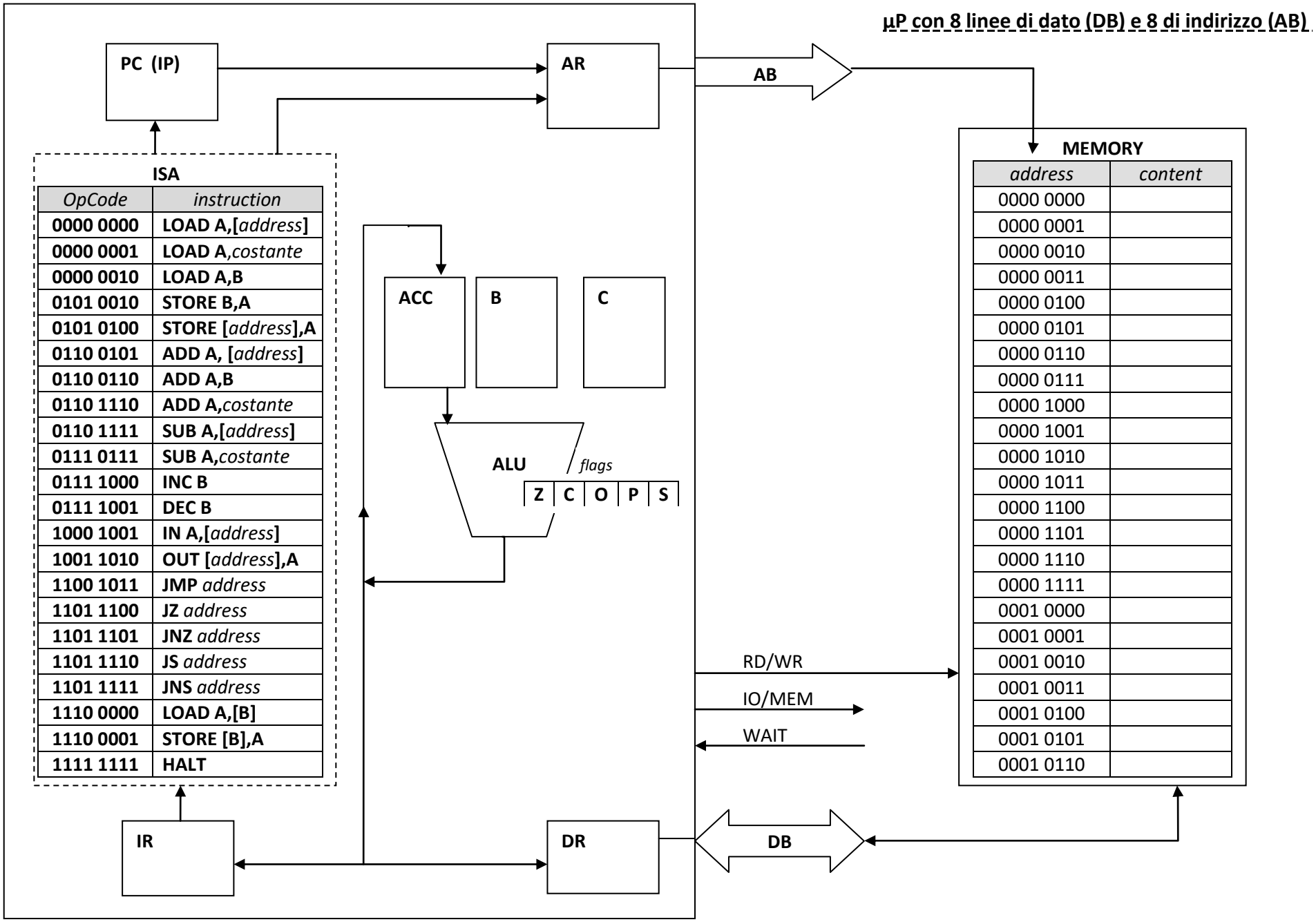

OpCode	instruction
0000 0000	**LOAD A,[*address*]**
0000 0001	**LOAD A,*costante***
0000 0010	**LOAD A,B**
0101 0010	**STORE B,A**
0101 0100	**STORE [*address*],A**
0110 0101	**ADD A, [*address*]**
0110 0110	**ADD A,B**
0110 1110	**ADD A,*costante***
0110 1111	**SUB A,[*address*]**
0111 0111	**SUB A,*costante***
0111 1000	**INC B**
0111 1001	**DEC B**
1000 1001	**IN A,[*address*]**
1001 1010	**OUT [*address*],A**
1100 1011	**JMP *address***
1101 1100	**JZ *address***
1101 1101	**JNZ *address***
1101 1110	**JS *address***
1101 1111	**JNS *address***
1110 0000	**LOAD A,[B]**
1110 0001	**STORE [B],A**
1111 1111	**HALT**

address	content
0000 0000	
0000 0001	
0000 0010	
0000 0011	
0000 0100	
0000 0101	
0000 0110	
0000 0111	
0000 1000	
0000 1001	
0000 1010	
0000 1011	
0000 1100	
0000 1101	
0000 1110	
0000 1111	
0001 0000	
0001 0001	
0001 0010	
0001 0011	
0001 0100	
0001 0101	
0001 0110	

VERSIONE HEXADECIMAL

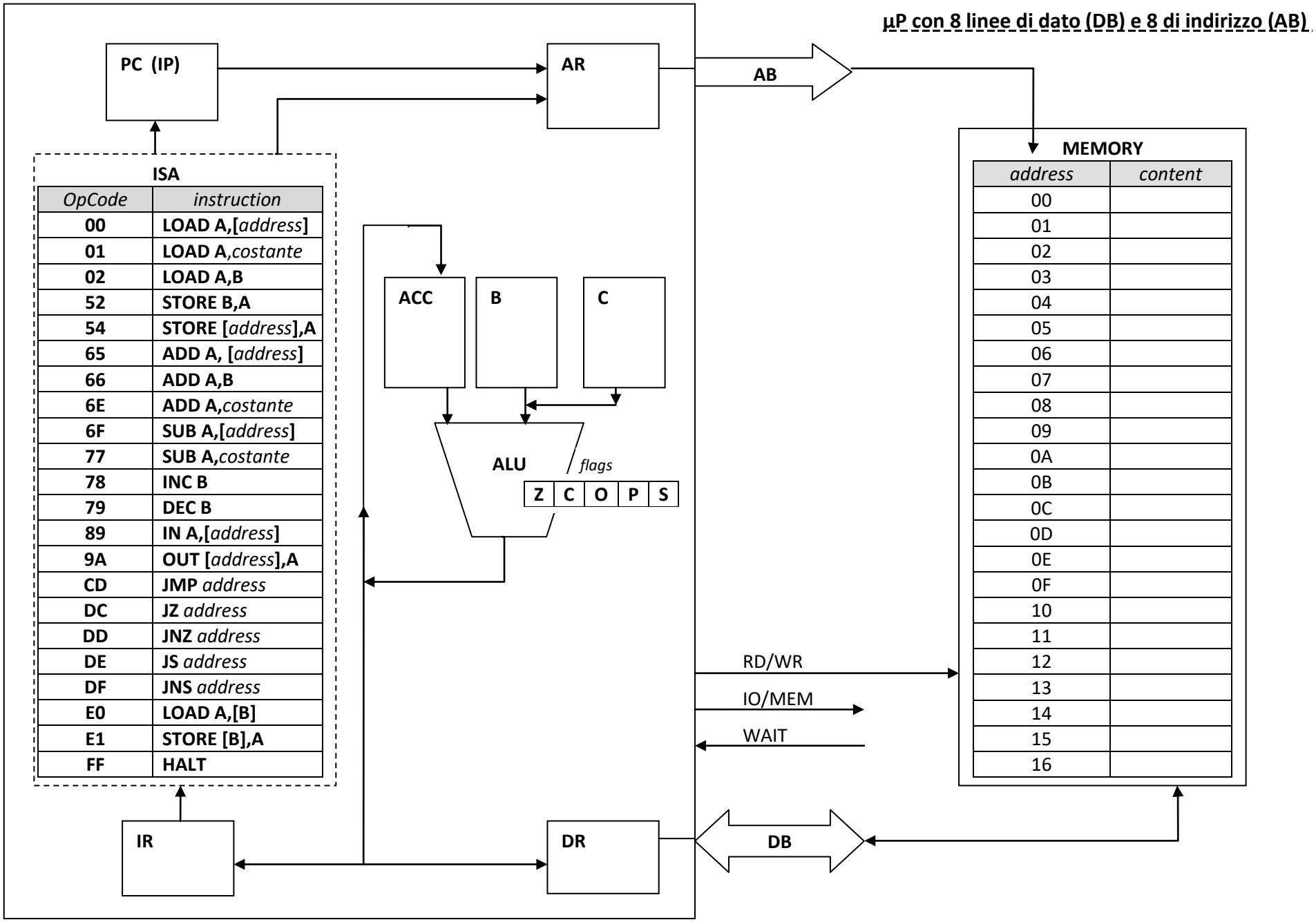

OpCode	instruction
00	**LOAD A,[*address*]**
01	**LOAD A,*costante***
02	**LOAD A,B**
52	**STORE B,A**
54	**STORE [*address*],A**
65	**ADD A, [*address*]**
66	**ADD A,B**
6E	**ADD A,*costante***
6F	**SUB A,[*address*]**
77	**SUB A,*costante***
78	**INC B**
79	**DEC B**
89	**IN A,[*address*]**
9A	**OUT [*address*],A**
CD	**JMP *address***
DC	**JZ *address***
DD	**JNZ *address***
DE	**JS *address***
DF	**JNS *address***
E0	**LOAD A,[B]**
E1	**STORE [B],A**
FF	**HALT**

address	*content*
00	
01	
02	
03	
04	
05	
06	
07	
08	
09	
0A	
0B	
0C	
0D	
0E	
0F	
10	
11	
12	
13	
14	
15	
16	